MAPNET II Transceiver Installation Instructions

Introduction

This publication describes the installation procedure for the following versions of the MAPNET II Transceiver card.

- 4120/4100-0110 MAPNET II Transceiver Card for 4100 Back Boxes (PID series 2975-91*xx*)
- 4100-9802 MAPNET II Transceiver Card for 4100 Back Boxes (aftermarket)

- 4100-3102 MAPNET II Transceiver Card for 4100U/4100ES Back Boxes (PID series 2975-94*xx*)
- 4100-9812 MAPNET II Transceiver Card for 4100U/4100ES Back Boxes (aftermarket)

Related Documentation

- *Field Wiring Diagram for 4100 Power Limited* (841-731) or,
- *Field Wiring Diagram for 4100 Non Power Limited* (841-995)
- *4100ES Fire Alarm System Installation Guide* (574-848)

In this Publication

This publication discusses the following topics:

Topic	See Page #
Cautions and Warnings	2
Overview	3
Setting the Card Address Switch	4
Removing/Installing JW1 and JW2	6
Installing Motherboards into 2975-91xx Back Boxes (4100)	7
Installing Motherboards into 2975-94xx Back Boxes (4100U/4100ES)	11
Installing the Daughter Card	16
Wiring the MAPNET Channel	17
Signal and Power Connections	21

© 2000, 2008, 2011 SimplexGrinnell LP. All rights reserved.
Specifications and other information shown were current as of publication and are subject to change without notice.
Simplex and the Simplex logo are trademarks of Tyco International Ltd. and its affiliates and are used under license.

Cautions and Warnings

Cautions and Warnings

READ AND SAVE THESE INSTRUCTIONS- Follow the instructions in this installation manual. These instructions must be followed to avoid damage to this product and associated equipment. Product operation and reliability depend upon proper installation.



DO NOT INSTALL ANY SIMPLEX® PRODUCT THAT APPEARS DAMAGED- Upon unpacking your Simplex product, inspect the contents of the carton for shipping damage. If damage is apparent, immediately file a claim with the carrier and notify an authorized Simplex product supplier.



ELECTRICAL HAZARD - Disconnect electrical field power when making any internal adjustments or repairs. All repairs should be performed by a representative or authorized agent of your local Simplex product supplier.



STATIC HAZARD - Static electricity can damage components. Handle as follows:

- Ground yourself before opening or installing components.
- Prior to installation, keep components wrapped in anti-static material at all times.



EYE SAFETY HAZARD - Under certain fiber optic application conditions, the optical output of this device may exceed eye safety limits. Do not use magnification (such as a microscope or other focusing equipment) when viewing the output of this device.

FCC RULES AND REGULATIONS – PART 15 - This equipment has been tested and found to comply with the limits for a Class A digital device pursuant to Part 15 of the FCC Rules. These limits are designed to provide reasonable protection against harmful interference when the equipment is operated in a commercial environment. This equipment generates, uses, and can radiate radio frequency energy and, if not installed and used in accordance with the instruction manual, may cause harmful interference to radio communications. Operation of this equipment in a residential area is likely to cause harmful interference in which case the user will be required to correct the interference at his own expense.

SYSTEM REACCEPTANCE TEST AFTER SOFTWARE CHANGES - To ensure proper system operation, this product must be tested in accordance with NFPA72-1996, Chapter 7 after any programming operation or change in site-specific software. Reacceptance testing is required after any change, addition or deletion of system components, or after any modification, repair or adjustment to system hardware or wiring.

All components, circuits, system operations, or software functions known to be affected by a change must be 100% tested. In addition, to ensure that other operations are not inadvertently affected, at least 10% of initiating devices that are not directly affected by the change, up to a maximum of 50 devices, must also be tested and proper system operation verified.

Overview

General Information

The MAPNET Transceiver Card consists of two cards: a motherboard that mounts into either a CPU bay or an expansion bay and a daughter card that mounts into the motherboard. General capabilities of the MAPNET Transceiver Card include:

- Connects up to 127 addressable MAPNET devices to the 4100.
- Supports either Class A or Class B wiring

Power Specifications

The MAPNET Transceiver Motherboard provides isolated 36 VDC power for the MAPNET channel. This power has the following specifications.

Output Voltage: +36 VDC +5% / -7.5% @ up to 500 mA
Voltage Ripple: 100 mV RMS

Environmental Requirements

The environment in which the transceiver card is mounted must be within the following range.

Temperature: 32° F to 120° F
Humidity: 85% Relative Humidity @ 86° F

Setting the Card Address Switch

Switches

Switch SW1 on the MAPNET Transceiver Daughter Card is a bank of eight dip switches. From left to right (see figure below) these switches are designated as SW1-1 through SW1-8. The function of these switches is as follows:

- **SW 1-1**. This switch sets the baud rate for the serial communication line running between the daughter card and the 4100 CPU. Set this switch to ON.

- **SW1-2 through SW1-8**. These switches set the card's address within the 4100 FACP. (These switches must be set to the value assigned to the card by the Programmer.) Refer to Table 1 for a complete list of the switch settings for all of the possible card addresses. Move a switch to the down position to turn it ON or to the up position to turn it OFF.

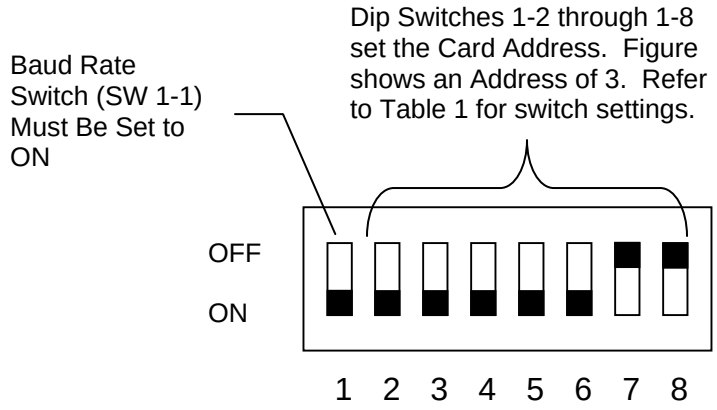

Figure 1. DIP Switch SW1

Continued on next page

Setting the Card Address Switch, *Continued*

Switches (*continued*)

Table 1. 4100 Daughter Card Addresses

Address	SW 1-2	SW 1-3	SW 1-4	SW 1-5	SW 1-6	SW 1-7	SW 1-8	Address	SW 1-2	SW 1-3	SW 1-4	SW 1-5	SW 1-6	SW 1-7	SW 1-8
1	ON	ON	ON	ON	ON	ON	OFF	61	ON	OFF	OFF	OFF	OFF	ON	OFF
2	ON	ON	ON	ON	ON	OFF	ON	62	ON	OFF	OFF	OFF	OFF	OFF	ON
3	ON	ON	ON	ON	ON	OFF	OFF	63	ON	OFF	OFF	OFF	OFF	OFF	OFF
4	ON	ON	ON	ON	OFF	ON	ON	64	OFF	ON	ON	ON	ON	ON	ON
5	ON	ON	ON	ON	OFF	ON	OFF	65	OFF	ON	ON	ON	ON	ON	OFF
6	ON	ON	ON	ON	OFF	OFF	ON	66	OFF	ON	ON	ON	ON	OFF	ON
7	ON	ON	ON	ON	OFF	OFF	OFF	67	OFF	ON	ON	ON	ON	OFF	OFF
8	ON	ON	ON	OFF	ON	ON	ON	68	OFF	ON	ON	ON	OFF	ON	ON
9	ON	ON	ON	OFF	ON	ON	OFF	69	OFF	ON	ON	ON	OFF	ON	OFF
10	ON	ON	ON	OFF	ON	OFF	ON	70	OFF	ON	ON	ON	OFF	OFF	ON
11	ON	ON	ON	OFF	ON	OFF	OFF	71	OFF	ON	ON	ON	OFF	OFF	OFF
12	ON	ON	ON	OFF	OFF	ON	ON	72	OFF	ON	ON	OFF	ON	ON	ON
13	ON	ON	ON	OFF	OFF	ON	OFF	73	OFF	ON	ON	OFF	ON	ON	OFF
14	ON	ON	ON	OFF	OFF	OFF	ON	74	OFF	ON	ON	OFF	ON	OFF	ON
15	ON	ON	ON	OFF	OFF	OFF	OFF	75	OFF	ON	ON	OFF	ON	OFF	OFF
16	ON	ON	OFF	ON	ON	ON	ON	76	OFF	ON	ON	OFF	OFF	ON	ON
17	ON	ON	OFF	ON	ON	ON	OFF	77	OFF	ON	ON	OFF	OFF	ON	OFF
18	ON	ON	OFF	ON	ON	OFF	ON	78	OFF	ON	ON	OFF	OFF	OFF	ON
19	ON	ON	OFF	ON	ON	OFF	OFF	79	OFF	ON	ON	OFF	OFF	OFF	OFF
20	ON	ON	OFF	ON	OFF	ON	ON	80	OFF	ON	OFF	ON	ON	ON	ON
21	ON	ON	OFF	ON	OFF	ON	OFF	81	OFF	ON	OFF	ON	ON	ON	OFF
22	ON	ON	OFF	ON	OFF	OFF	ON	82	OFF	ON	OFF	ON	ON	OFF	ON
23	ON	ON	OFF	ON	OFF	OFF	OFF	83	OFF	ON	OFF	ON	ON	OFF	OFF
24	ON	ON	OFF	OFF	ON	ON	ON	84	OFF	ON	OFF	ON	OFF	ON	ON
25	ON	ON	OFF	OFF	ON	ON	OFF	85	OFF	ON	OFF	ON	OFF	ON	OFF
26	ON	ON	OFF	OFF	ON	OFF	ON	86	OFF	ON	OFF	ON	OFF	OFF	ON
27	ON	ON	OFF	OFF	ON	OFF	OFF	87	OFF	ON	OFF	ON	OFF	OFF	OFF
28	ON	ON	OFF	OFF	OFF	ON	ON	88	OFF	ON	OFF	OFF	ON	ON	ON
29	ON	ON	OFF	OFF	OFF	ON	OFF	89	OFF	ON	OFF	OFF	ON	ON	OFF
30	ON	ON	OFF	OFF	OFF	OFF	ON	90	OFF	ON	OFF	OFF	ON	OFF	ON
31	ON	ON	OFF	OFF	OFF	OFF	OFF	91	OFF	ON	OFF	OFF	ON	OFF	OFF
32	ON	OFF	ON	ON	ON	ON	ON	92	OFF	ON	OFF	OFF	OFF	ON	ON
33	ON	OFF	ON	ON	ON	ON	OFF	93	OFF	ON	OFF	OFF	OFF	ON	OFF
34	ON	OFF	ON	ON	ON	OFF	ON	94	OFF	ON	OFF	OFF	OFF	OFF	ON
35	ON	OFF	ON	ON	ON	OFF	OFF	95	OFF	ON	OFF	OFF	OFF	OFF	OFF
36	ON	OFF	ON	ON	OFF	ON	ON	96	OFF	OFF	ON	ON	ON	ON	ON
37	ON	OFF	ON	ON	OFF	ON	OFF	97	OFF	OFF	ON	ON	ON	ON	OFF
38	ON	OFF	ON	ON	OFF	OFF	ON	98	OFF	OFF	ON	ON	ON	OFF	ON
39	ON	OFF	ON	ON	OFF	OFF	OFF	99	OFF	OFF	ON	ON	ON	OFF	OFF
40	ON	OFF	ON	OFF	ON	ON	ON	100	OFF	OFF	ON	ON	OFF	ON	ON
41	ON	OFF	ON	OFF	ON	ON	OFF	101	OFF	OFF	ON	ON	OFF	ON	OFF
42	ON	OFF	ON	OFF	ON	OFF	ON	102	OFF	OFF	ON	ON	OFF	OFF	ON
43	ON	OFF	ON	OFF	ON	OFF	OFF	103	OFF	OFF	ON	ON	OFF	OFF	OFF
44	ON	OFF	ON	OFF	OFF	ON	ON	104	OFF	OFF	ON	OFF	ON	ON	ON
45	ON	OFF	ON	OFF	OFF	ON	OFF	105	OFF	OFF	ON	OFF	ON	ON	OFF
46	ON	OFF	ON	OFF	OFF	OFF	ON	106	OFF	OFF	ON	OFF	ON	OFF	ON
47	ON	OFF	ON	OFF	OFF	OFF	OFF	107	OFF	OFF	ON	OFF	ON	OFF	OFF
48	ON	OFF	OFF	ON	ON	ON	ON	108	OFF	OFF	ON	OFF	OFF	ON	ON
49	ON	OFF	OFF	ON	ON	ON	OFF	109	OFF	OFF	ON	OFF	OFF	ON	OFF
50	ON	OFF	OFF	ON	ON	OFF	ON	110	OFF	OFF	ON	OFF	OFF	OFF	ON
51	ON	OFF	OFF	ON	ON	OFF	OFF	111	OFF	OFF	ON	OFF	OFF	OFF	OFF
52	ON	OFF	OFF	ON	OFF	ON	ON	112	OFF	OFF	OFF	ON	ON	ON	ON
53	ON	OFF	OFF	ON	OFF	ON	OFF	113	OFF	OFF	OFF	ON	ON	ON	OFF
54	ON	OFF	OFF	ON	OFF	OFF	ON	114	OFF	OFF	OFF	ON	ON	OFF	ON
55	ON	OFF	OFF	ON	OFF	OFF	OFF	115	OFF	OFF	OFF	ON	ON	OFF	OFF
56	ON	OFF	OFF	OFF	ON	ON	ON	116	OFF	OFF	OFF	ON	OFF	ON	ON
57	ON	OFF	OFF	OFF	ON	ON	OFF	117	OFF	OFF	OFF	ON	OFF	ON	OFF
58	ON	OFF	OFF	OFF	ON	OFF	ON	118	OFF	OFF	OFF	ON	OFF	OFF	ON
59	ON	OFF	OFF	OFF	ON	OFF	OFF	119	OFF	OFF	OFF	ON	OFF	OFF	OFF
60	ON	OFF	OFF	OFF	OFF	ON	ON								

Removing/Installing JW1 and JW2

Overview

If the system has four-wire devices (non-isolated), remove or install pluggable jumpers JW1 and JW2, which are located on the MAPNET Transceiver Motherboard, as follows:

- If only two-wire devices (IAMs and detectors) are on the MAPNET channel, make sure a jumper is installed in JW2 and remove the jumper from JW1. (A resistance of 50 K Ohms or less between Earth and any of the four MAPNET comm. lines causes the motherboard to detect an Earth Trouble on a system with two-wire devices.)

- If four-wire devices (ZAMs, sounder bases, relay bases) are on the MAPNET channel, remove the jumper from JW2 and make sure a jumper is installed in JW1. This disables the MAPNET Earth detect and ties it to the main system's Earth detect circuit.

Refer to Figure 2 for the locations of jumpers JW1 and JW2.

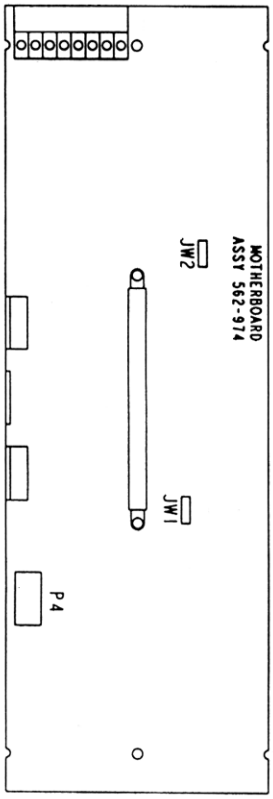

Figure 2. Locations of Jumpers JW1 and JW2

Installing Motherboards into 2975-91xx Back Boxes (4100)

Overview

The MAPNET transceiver modules can be mounted to either 4100 Back Boxes (PID series 2975-91*xx*) or 4100U/4100ES Back Boxes (PID series 2975-94*xx*).

- The 4120/4100-0110 and 4100-9802 versions are used with 4100 Back Boxes.
- The 4100-3102 and 4100-9812 versions are used with 4100U/4100ES Back Boxes.

This section covers 4120/4100-0111and 4100-9802 module mounting into 4100 Back Boxes.

Installing into a 2975-91*xx* Master Controller Bay

Use the following guidelines and instruction when installing into a master controller bay.

- If the 575-274 Master Motherboard is used, it must be installed in the leftmost position of this bay. If the 575-274 Master Motherboard is not used, the CPU motherboard must be installed in the leftmost position of the bay.
- The power supply must be installed in the rightmost position of the bay.
- Relay cards must be installed in the slots immediately to the left of the power supply. This is necessary to allow for the proper routing of non-power limited wiring (120 VAC wiring connected to the relay card).
- If used, the Class B motherboard (575-275) must be installed to the left of the relay cards. If a physical bridge is used with the Class B motherboard, it must be to the right of any motherboards using NICs. This allows for earth ground detection via the physical bridge.

Install the motherboard as described below.

1. Orient the motherboard so that the connector labeled J1 is on the right and the header labeled P1 is on the left.
2. Slide the motherboard you are installing to the left until the pins are completely inserted in the connector of a previously installed motherboard.
3. Secure the motherboard to the chassis with six torx screws.

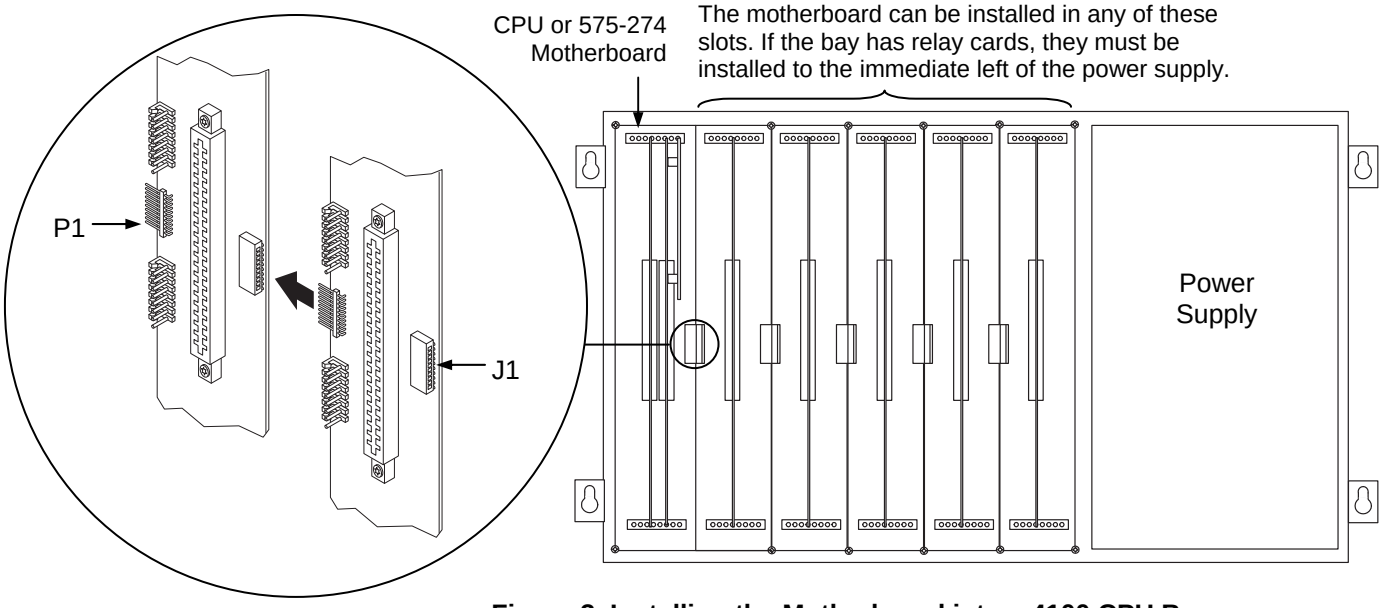

Figure 3. Installing the Motherboard into a 4100 CPU Bay

Continued on next page

Installing into a 2975-91*xx* Expansion Bay

Review the following guidelines before mounting the motherboard into a 2975-91*xx* Expansion Bay.

- If a power supply is installed in the bay, it must be installed on the far right of the bay and any relay modules must be installed in the slots immediately to its left.
- Relay cards **must be installed in the rightmost possible slots**. This is necessary to allow for the proper routing of non-power limited wiring (typically 120 VAC wiring), which could be connected to a relay module.
- If a 4100-0155 SDACT or a 4100-0153 CCDACT is installed in the bay, it must be installed in the far left or far right slot. Neither of these modules contains the J1 or P1 connectors, which are used to distribute power and communications to adjacent modules.

Use the following directions and Figure 4 to install a motherboard into an expansion bay.

1. Orient the motherboard with the connector labeled J1 on the right and the header labeled P1 on the left.
2. Match the connector on the previously installed motherboard with the pins on the motherboard you are installing. Slide the motherboard to the left until the pins are completely inserted in the connector of the previously installed motherboard. If you are installing the leftmost board, the pins will remain unconnected.
3. Secure the motherboard to the chassis with six torx screws.

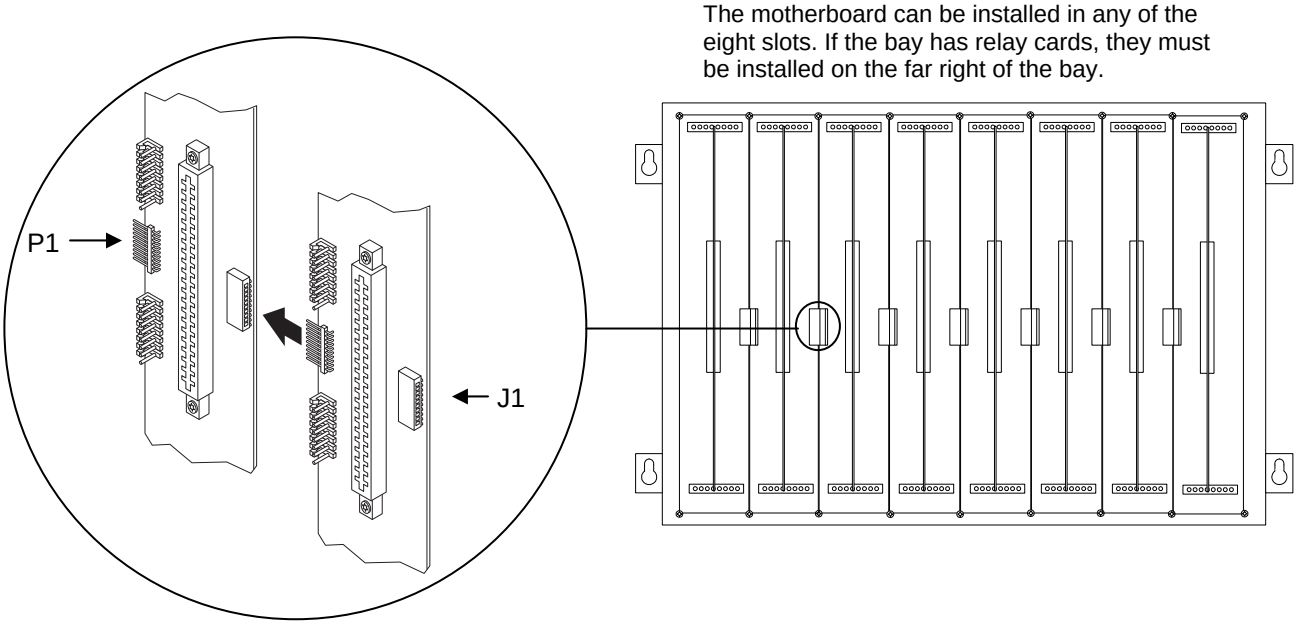

Figure 4. Installing the Motherboard into a 4100 Expansion Bay

4. If you are installing the leftmost motherboard, connect a 733-525 Power and Communication Harness. Continue to the next topic to connect the harness.

Continued on next page

Connecting the 733-525 Harness

If you need to connect a 733-525 Harness to a motherboard, refer to Figure 5 and follow these steps. Make sure to route the power and communication wiring on the left side of the bay.

1. Connect one end of the harness to a motherboard in an adjacent bay.

   If the adjacent bay is a master controller bay, connect the harness to the P2 and P3 connectors of the master controller motherboard and continue to step 2.

   If the adjacent bay is an expansion bay, connect the harness to the P2 and P3 connectors of the motherboard installed in the leftmost slot. (If a 4100-0155 SDACT or a 4100-0153 CCDACT occupies the leftmost slot, connect the harness to the motherboard in the second slot from the left.) Connect the harness as follows:

   a. Insert the harness connector with the blue wire into the P2 connector. Note that the P2 connector has eight pins. Insert the harness connector on either the top four pins or the bottom four pins, not in the middle.

   b. Insert the harness connector with the white wire into the P3 connector. Note that the P3 connector has eight pins. Insert the harness connector on either the top four pins or the bottom four pins, not in the middle.

Continued on next page

Connecting the 733-525 Harness (*continued*)

2. Connect the other end of the harness to the leftmost motherboard in the next bay, as described below. Make sure to route the wiring on the left side of the bay.

   a. Insert the harness connector with the blue wire into the P2 connector. Note that the P2 connector has eight pins. Insert the harness connector on either the top four pins or the bottom four pins, not in the middle.

   b. Insert the harness connector with the white wire into the P3 connector. Note that the P3 connector has eight pins. Insert the harness connector on either the top four pins or the bottom four pins, not in the middle.

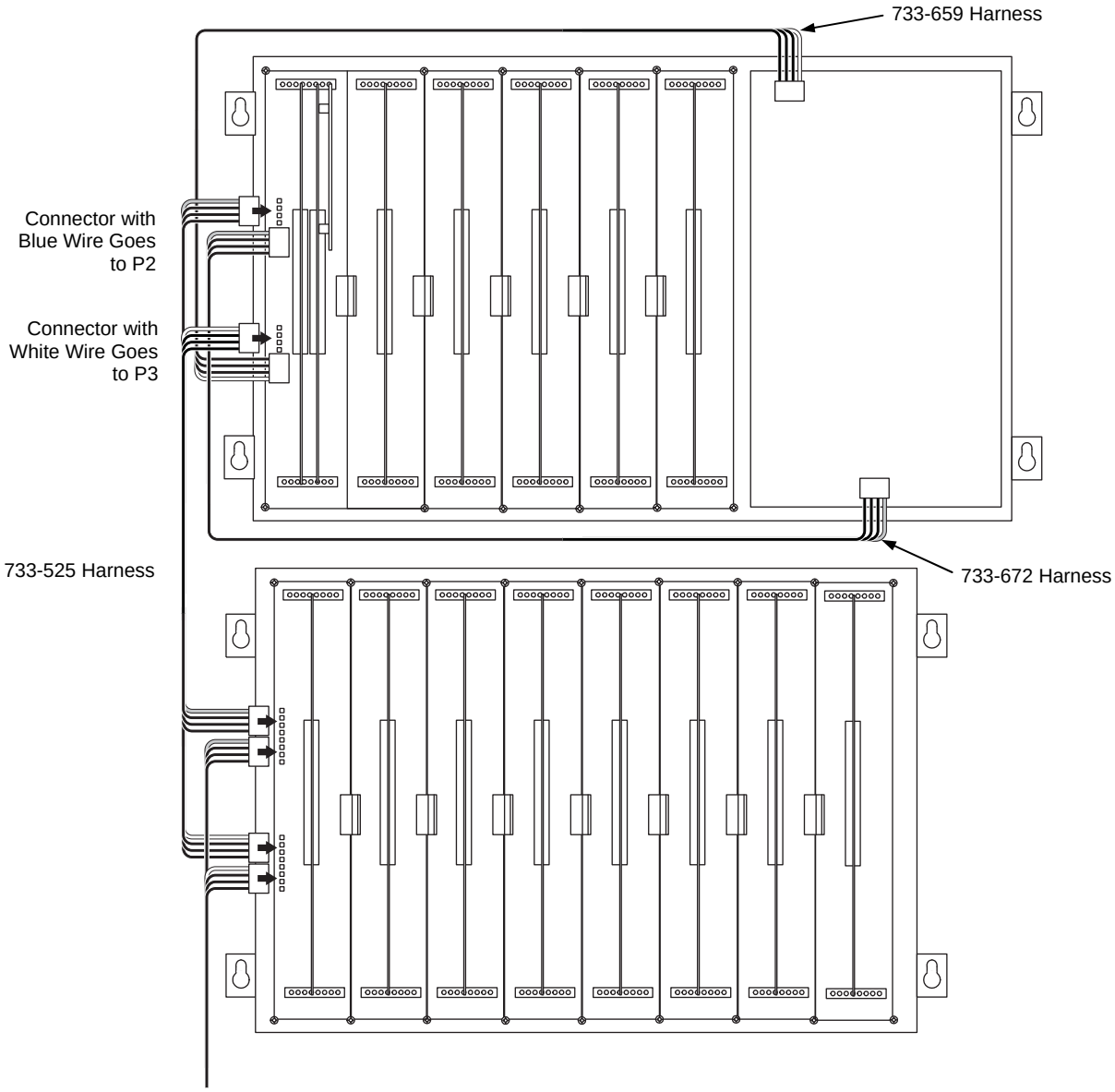

Figure 5. Power and Communication Wiring for Motherboards

Installing Motherboards into 2975-94xx Back Boxes (4100U/4100ES)

Overview

The MAPNET transceiver modules can be mounted to either 4100 Back Boxes (PID series 2975-91*xx*) or 4100U/4100ES Back Boxes (PID series 2975-94*xx*).

- The 4120/4100-0110 and 4100-9802 versions are used with 4100 Back Boxes.
- The 4100-3102 and 4100-9812 versions are used with 4100U/4100ES Back Boxes.

This section covers 4100-3102 and 4100-9812 module mounting into 2975-94*xx* Back Boxes.

Installing into a 2975-94*xx* CPU Bay

Up to two motherboards may be installed with the system CPU in the CPU bay.

Use the following directions to mount a motherboard into a CPU bay.

1. Install the two nylon standoffs onto the threaded screws on the back side of the motherboard.
2. Orient the motherboard with the connector labeled J1 on the right and the header labeled P1 on the left.
3. Slide the motherboard to the right until the pins from P1 on the motherboard to the right are completely inserted in the motherboard's J1 connector.
4. Attach six lockwashers and metal standoffs to the chassis, and secure the motherboard to the chassis using six #6 screws.

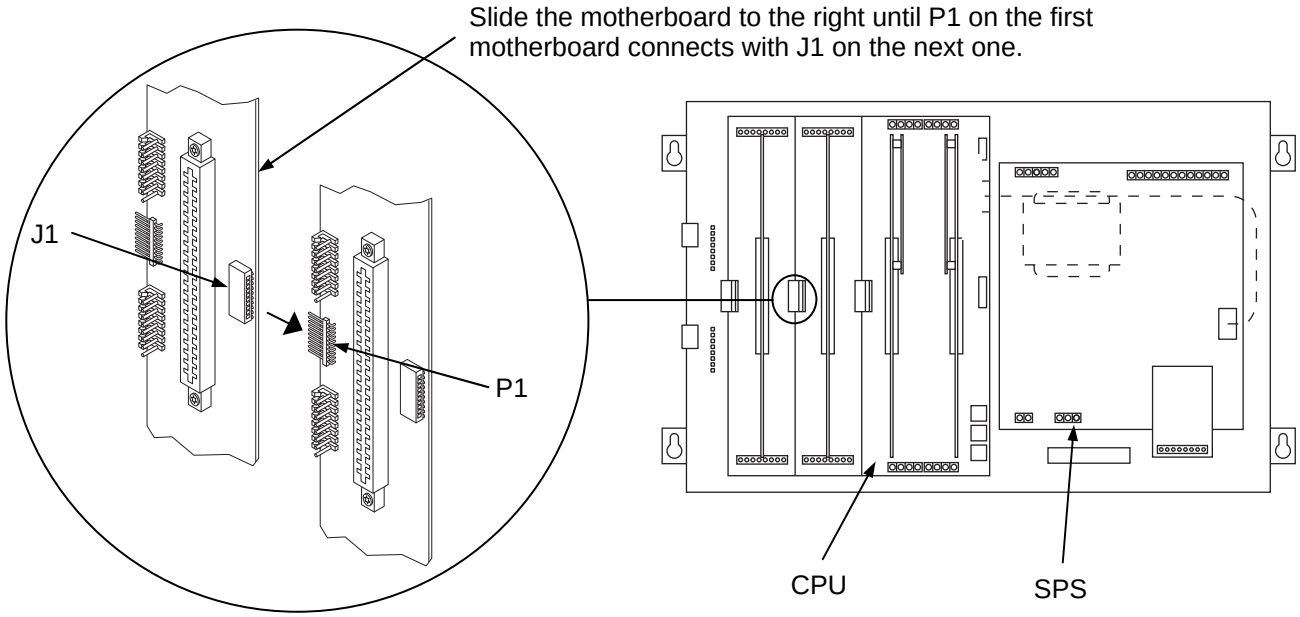

Figure 6. Installing the Motherboard into a 4100U/4100ES CPU Bay

Continued on next page

Installing into a 2975-94*xx* Expansion Bay

When installing 2 x 11 ½-inch motherboards in a 4100U/4100ES expansion bay, adhere to the following guidelines:

- Each expansion bay assembly includes a chassis, two end supports, one LED/switch frame, and a power distribution interface (PDI) board.
- An expansion bay holds up to eight 4" x 5" modules. A double-size module, such as the expansion power supply (XPS), takes up two blocks of space as shown below.
- Up to seven 2" x 11 ½" motherboards can be installed in an expansion bay **if no 4" x 5" modules are installed in the bay**. Motherboards are mounted on top of the PDI in expansion bays. The data and power that would normally be bussed via the PDI is instead routed across the boards via ribbon cable from one board to the next.
- As shown in the figure below, motherboards can be installed alongside 4" x 5" cards, if necessary.
- The leftmost slot must not contain a motherboard.
- 4" x 5" cards must be added from right to left.
- Motherboards must be added from left to right.

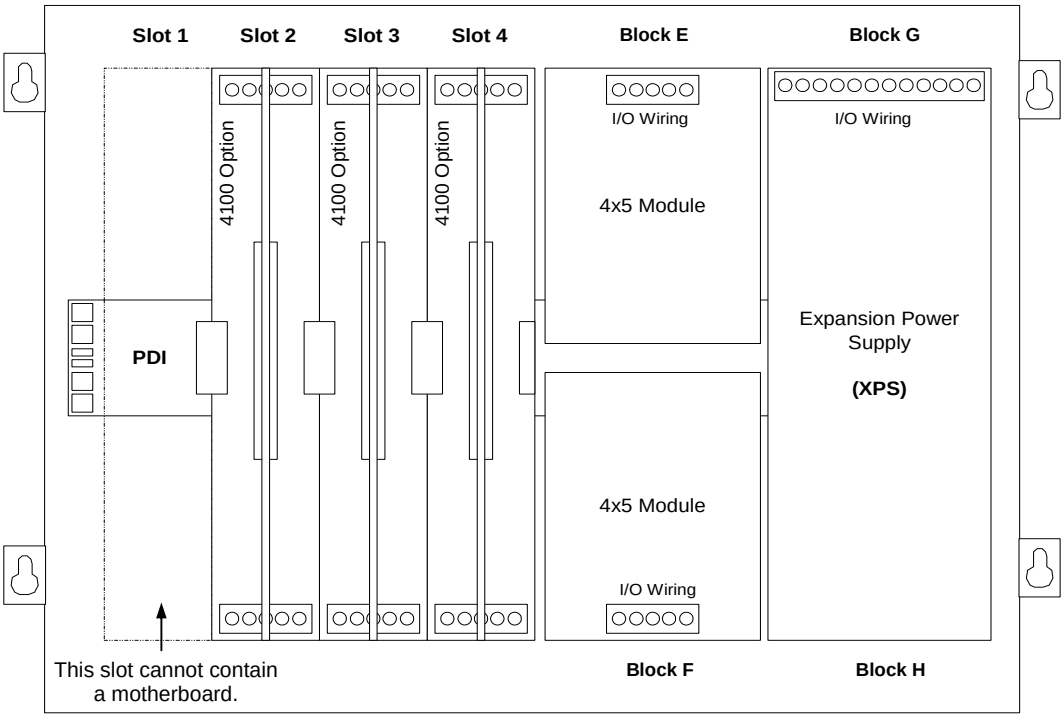

Figure 7. Installing the Motherboard in a 4100U/4100ES Expansion Bay

Continued on next page

Installing into a 2975-94xx Expansion Bay (*continued*)

Use the following procedure when installing motherboards in an expansion bay. Start with the second slot from the left and fill to the right.

1. Install the two nylon standoffs onto the threaded screws on the backside of the motherboard.
2. Orient the motherboard with the connector labeled J1 on the right and the header labeled P1 on the left.
3. Attach six metal threaded standoffs and lockwashers into the screw holes on the chassis.
4. Secure the motherboard to the standoffs using six #6 torx screws as shown in Figure 8.

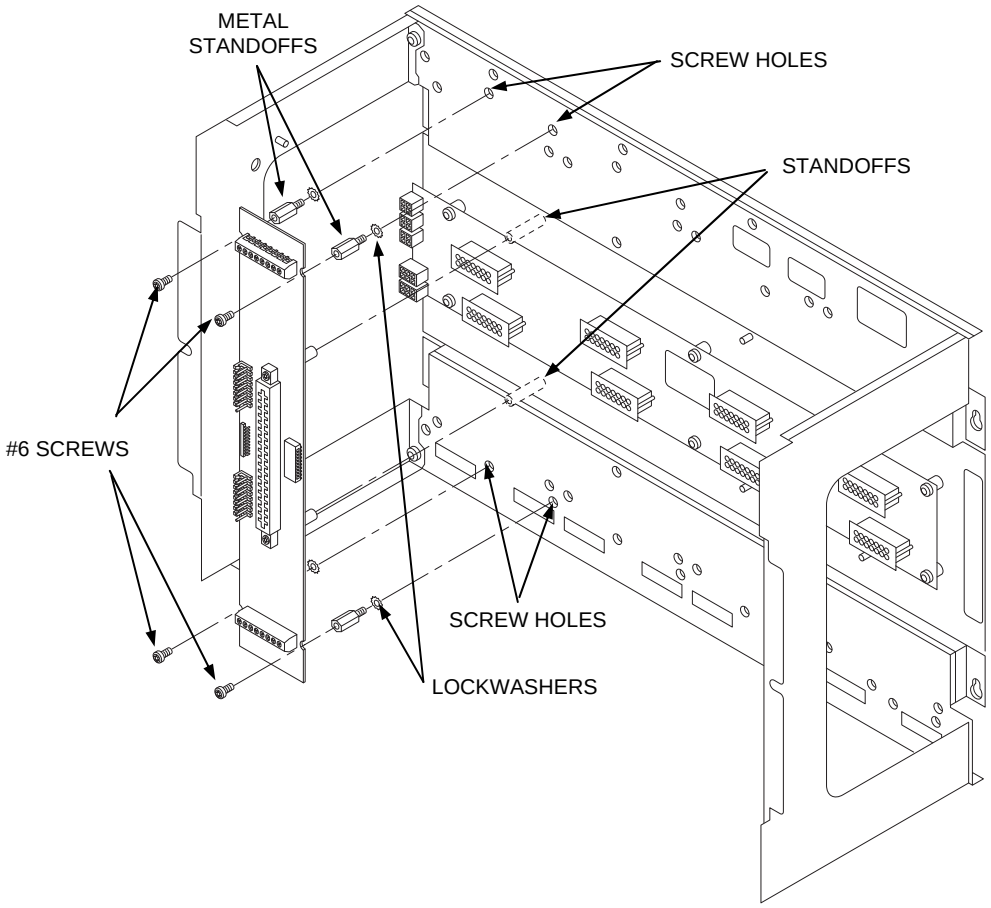

Figure 8. Installing the Motherboard in a 4100U/4100ES Expansion Bay

5. If you are installing the leftmost motherboard, connect a 733-525 Power and Communication Harness. Continue to the next topic to connect the harness.

Continued on next page

Connecting the 733-525 Harness

If you need to connect a 733-525 Harness to a motherboard, refer to Figure 9 and follow these steps. Make sure to route the power and communication wiring on the left side of the bay.

1. Connect one end of the harness to a motherboard in an adjacent bay.

   If the adjacent bay is the CPU bay, connect the harness to the P8 and P7 connectors of the CPU motherboard.

   - Insert the harness connector with the blue wire into the P8 connector. Note that the P8 connector has eight pins. Insert the harness connector on either the top four pins or the bottom four pins, not in the middle.
   - Insert the harness connector with the white wire into the P7 connector. Note that the P7 connector has eight pins. Insert the harness connector on either the top four pins or the bottom four pins, not in the middle.

   If the adjacent bay is an expansion bay, connect the harness to the P2 and P3 connectors of the motherboard installed in the leftmost slot. (If an SDACT or CCDACT occupies the leftmost slot, connect the harness to the motherboard in the second slot from the left.) Connect the harness as follows:

   - Insert the harness connector with the blue wire into the P2 connector. Note that the P2 connector has eight pins. Insert the harness connector on either the top four pins or the bottom four pins, not in the middle.
   - Insert the harness connector with the white wire into the P3 connector. Note that the P3 connector has eight pins. Insert the harness connector on either the top four pins or the bottom four pins, not in the middle.

2. Connect the other end of the harness to the leftmost motherboard in the next bay, as described below. Make sure to route the wiring on the left side of the bay.

   - Insert the harness connector with the blue wire into the P2 connector. Note that the P2 connector has eight pins. Insert the harness connector on either the top four pins or the bottom four pins, not in the middle.
   - Insert the harness connector with the white wire into the P3 connector. Note that the P3 connector has eight pins. Insert the harness connector on either the top four pins or the bottom four pins, not in the middle.

Continued on next page

Connecting the 733-525 Harness (*continued*)

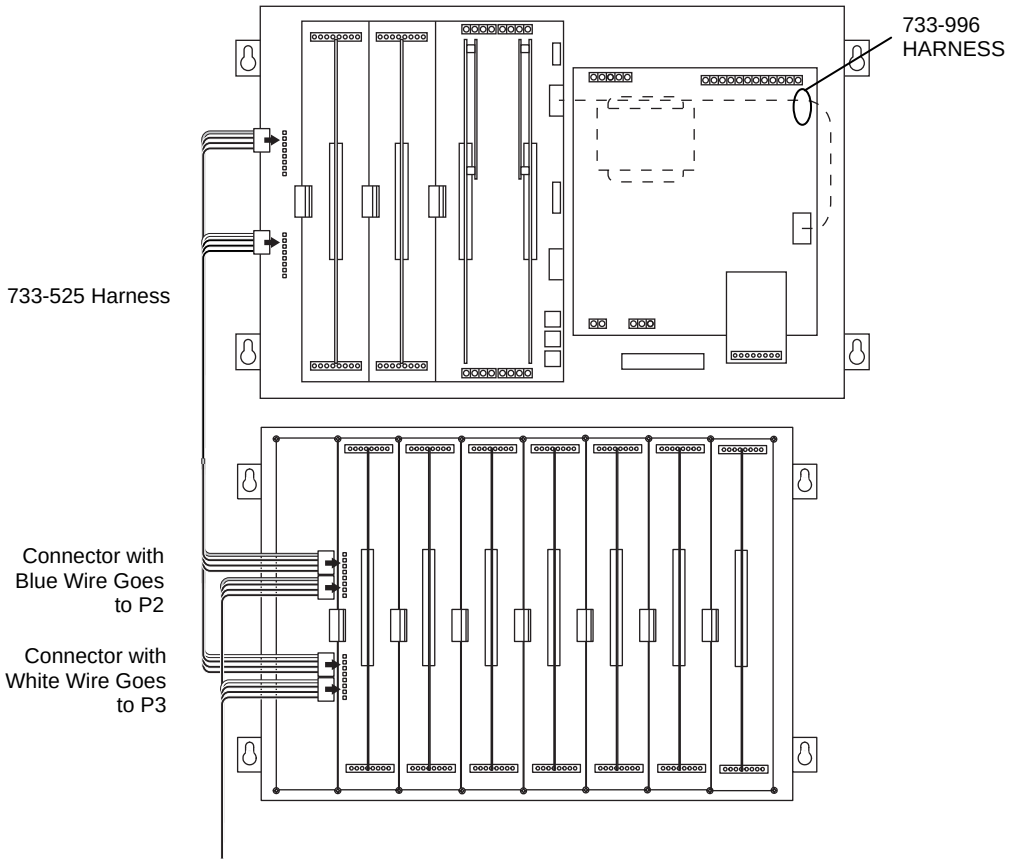

Figure 9. Power and Communication Wiring for Motherboard

Installing the Daughter Card

Installing the Daughter Card

The daughter card inserts into the connector located in the center of the motherboard. The connector is keyed so that the daughter card fits only one way. Before installing the card, examine the slot in the motherboard and the fingers on the daughter card and note where the key is located.

Note: The figure below is a general-purpose illustration that applies to all daughter cards.

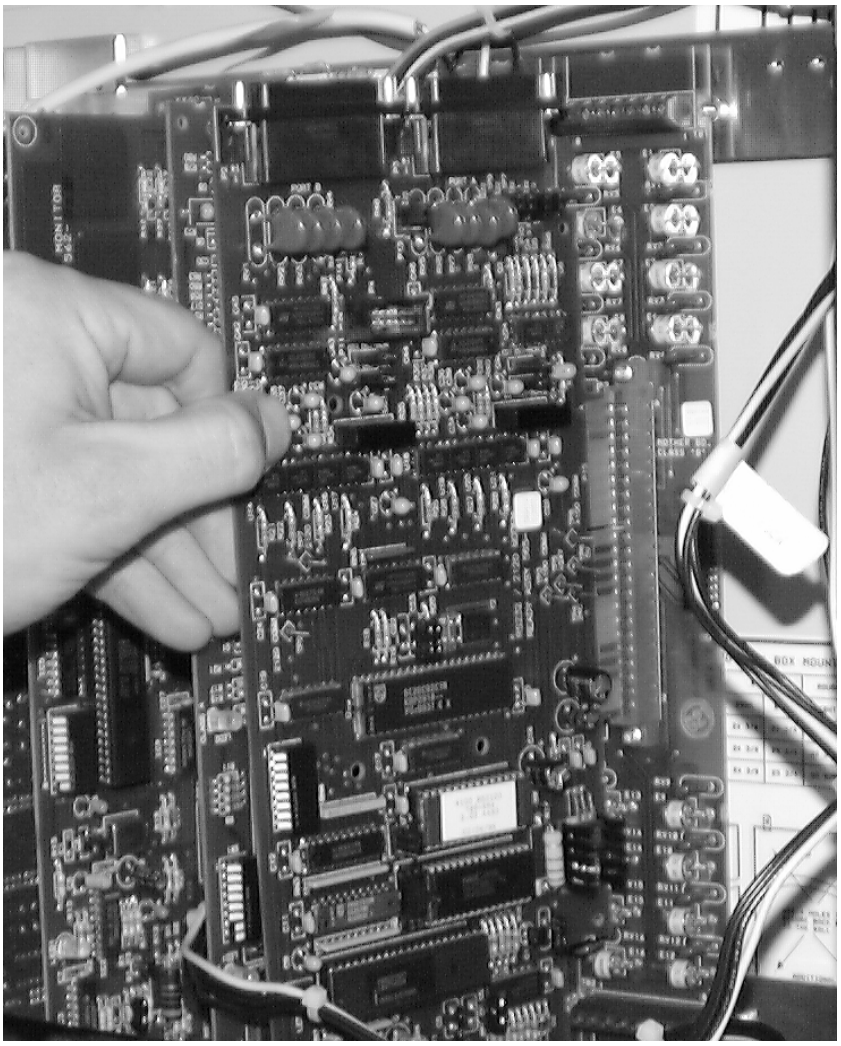

Figure 10. Installing the Daughter Card

Wiring the MAPNET Channel

Overview

This section contains field wiring guidelines and instructions for the MAPNET transceiver modules.

General Guidelines

Make sure these guidelines are accounted for before wiring:

- All wiring is supervised.
- MAPNET II communication power: 40 VDC @ 0.5 A, 3333 Baud.
- Refer to instructions packaged with each addressable device for its wiring connections.
- Any wiring leaving the building requires 2081-9044 Overvoltage Protectors where it leaves the building and another where it re-enters the building. Only four protectors total are allowed per MAPNET channel.
- Up to 43 Sounder Bases are allowed on a MAPNET channel, when used for coded operation.
- If Class A wiring is not used, the 733-678 Harness remains installed. Leave the 733-678 Harness on all unused loops.
- Up to 2 isolator boards per MAPNET channel are allowed.
- All wires must be 18 AWG, or as the local code dictates.
- Conductors must test free of all grounds.
- Wiring to IO terminals must not be run with AC wiring.
- Power must come from a Simplex-approved power supply.
- All wiring must be done using copper conductors only, unless noted otherwise.
- If shielded wire is used,
  - the metallic continuity of the shield must be maintained throughout the entire cable length.
  - the entire length of the cable must have a resistance greater than 1 Megohm to earth ground.
- Underground wiring must be free of all water.
- In areas of high lightning activity, or in areas that have large power surges, the 2081-9027 Transient Suppressor should be used on monitor points.
- Wires must not be run through elevator shafts.
- Wires that run in plenum must be in conduit.
- A system ground must be provided for earth detection and lightning protection devices. This connection must comply with approved earth detection per NFPA780.
- Only system wiring can be run together in the same conduit.

Continued on next page

Power-Limited Guidelines

Make sure these guidelines are accounted for before wiring for power-limited systems:

- Non-power limited field wiring (AC power, batteries, City connection) must be installed and routed in the shaded areas shown in Figure 11.
- Power-limited field wiring must be installed and routed in the non-shaded areas shown in Figure 11, with the exception of City wiring.
- Excess slack should be kept to a minimum inside the back box enclosure. The wiring should be neatly dressed and bundled together using the wire ties provided with the equipment. Anchor power-limited wiring to tie points, as shown in Figure 11.

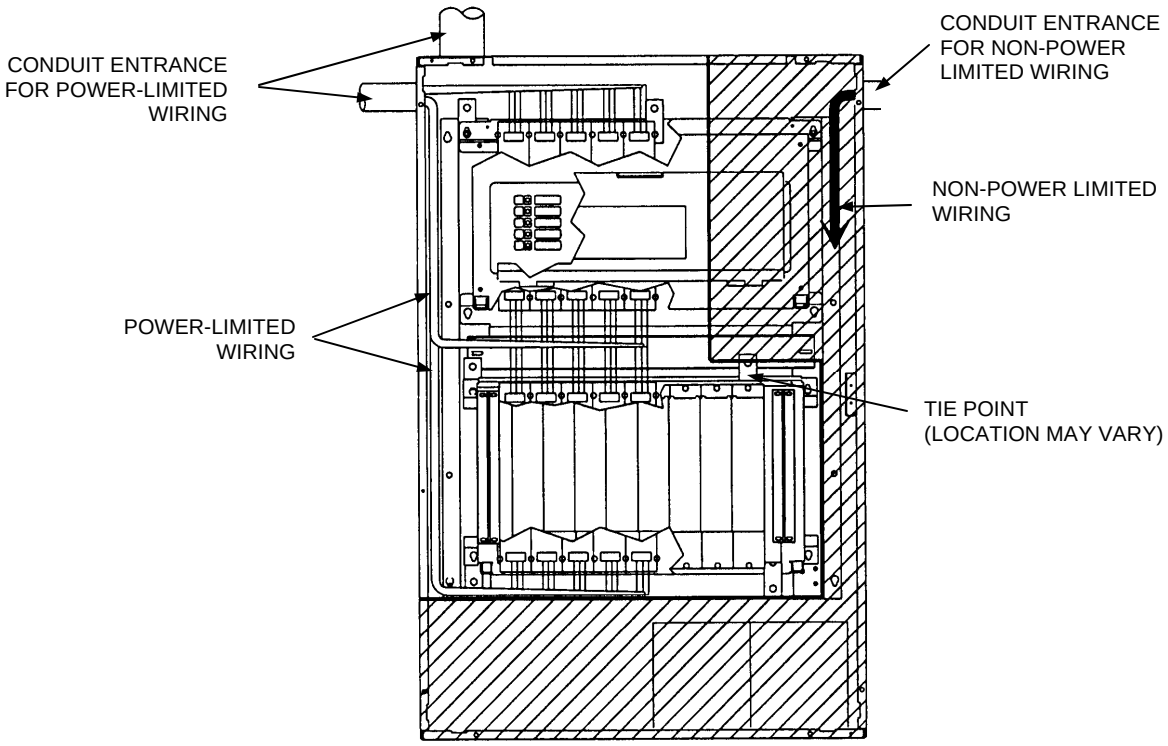

Figure 11. Power-Limited Wiring

- Tie the wiring located between bays to the internal wiring troughs, if applicable.
- When powering remote units or switching power through relay contacts, power for these circuits must be provided by a UPS-style power supply, the 4100-1108 Power Supply (8A), or a power-limited power supply that listed for fire-protective signaling use.

Continued on next page

Power-Limited Guidelines (*continued*)

- *Auxiliary power only:* In order to connect a circuit using power-limited wiring, the devices being powered must all be addressable, or a UL Listed EOL relay must be used to supervise the circuit. Refer to Figure 12 for wiring directions for the EOL relay.

Note: The 2098-9739 Relay is used as an example. Other UL Listed EOL relays can be used, depending on the application.

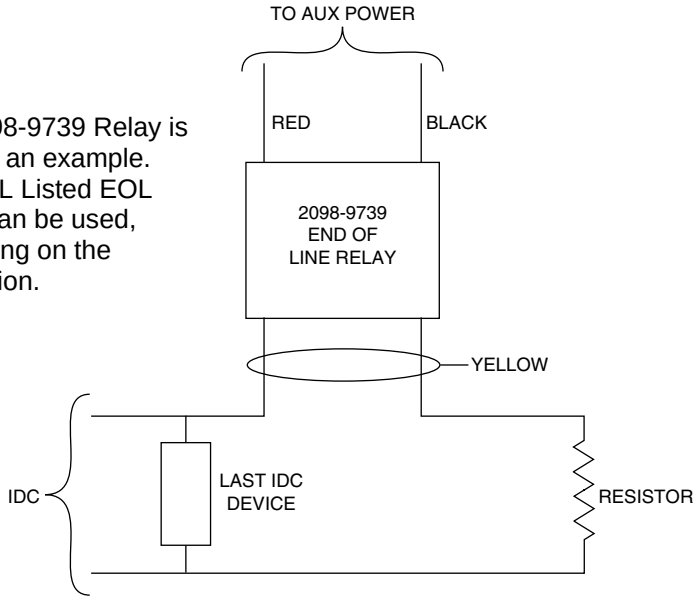

Figure 12. The EOL Relay

Continued on next page

Wiring Diagrams

Refer to Figure 13 for examples of Class A and Class B wiring. The +, S, and - connection points are silkscreened on the board.

If you are wiring a Class B MAPNET channel, connect a jumper between the two positive terminals and a jumper between the two minus terminals, as shown in the figure below.

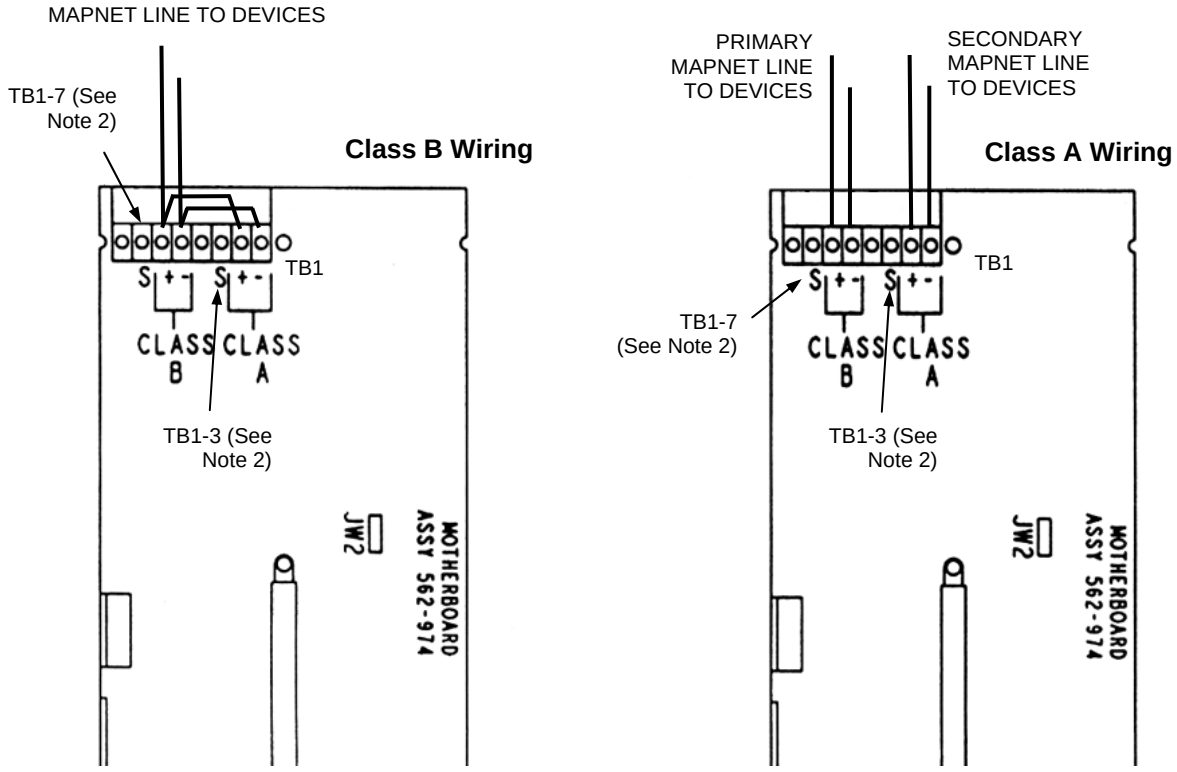

Figure 13. Wiring MAPNET Channels

Notes:

1. Wire length may not exceed 3,270 feet (1 km).
2. TB1-3 or TB1-7 are internally connected to Earth and are the normal termination point for MAPNET shields. Some audio systems may require MAPNET shields to be tied to System 0 V to minimize MAPNET cross-talk to speakers.

Signal and Power Connections

Overview

Proper operation of the MAPNET channel requires that you connect a 24 VDC power harness to pins 1, 2, and 3 of connector P4 on the MAPNET power supply for the 4100, or jumpering P3 to P4 for the 4100U/4100ES. The power requirements of the transceiver are as follows:

24 V Voltage Range:	20.4 to 32 VDC
24 V Current Draw:	25 mA, max.
8 V Voltage Range:	7.5 to 8.5 VDC
8 V Current Draw:	150 mA, max.
Signal Voltage Range:	20.4 to 32 VDC
Signal Current Draw:	200 mA @ 20.4 VDC (plus 1.75 mA per device, max.) 170 mA @ 24 VDC (plus 1.6 mA per device, max.)

Pins 4 and 5 of P4, meanwhile, are used to connect to signal cards.

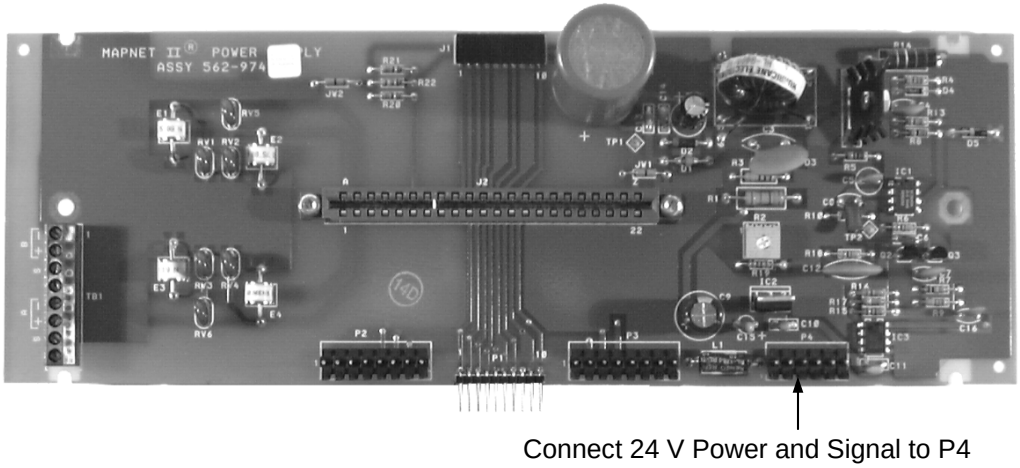

Figure 14. Location of P3 and P4 Connectors

Non-4100U /4100ES Signal/Power Connections

Figure 15, below, shows the power and signal connections for P4 when using the 4100.

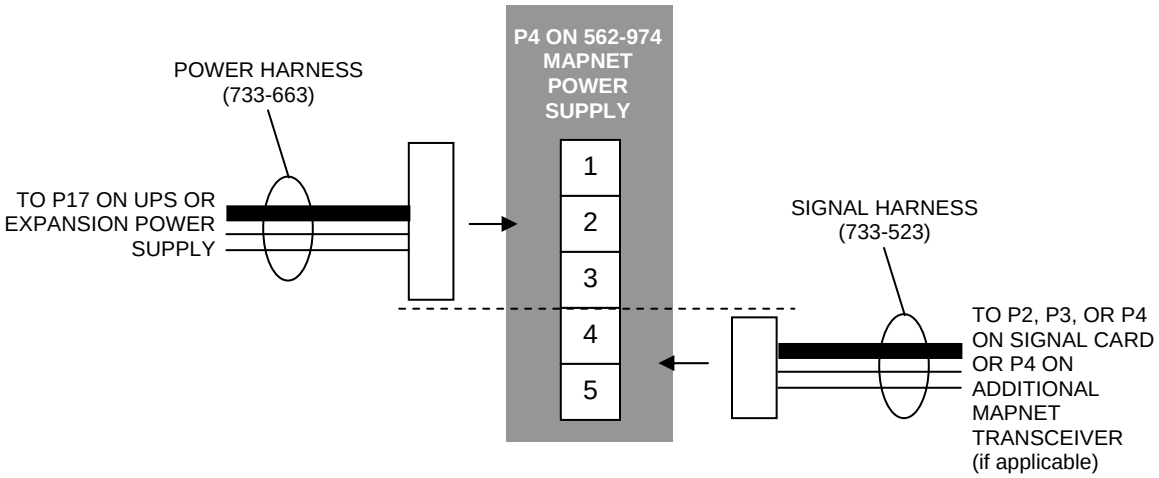

Figure 15. Signal and Power Connections (4100 only)

Continued on next page

4100U/4100ES Signal/Power Connections

Figure 16, below, shows the power and signal connections when using the 4100U/4100ES.

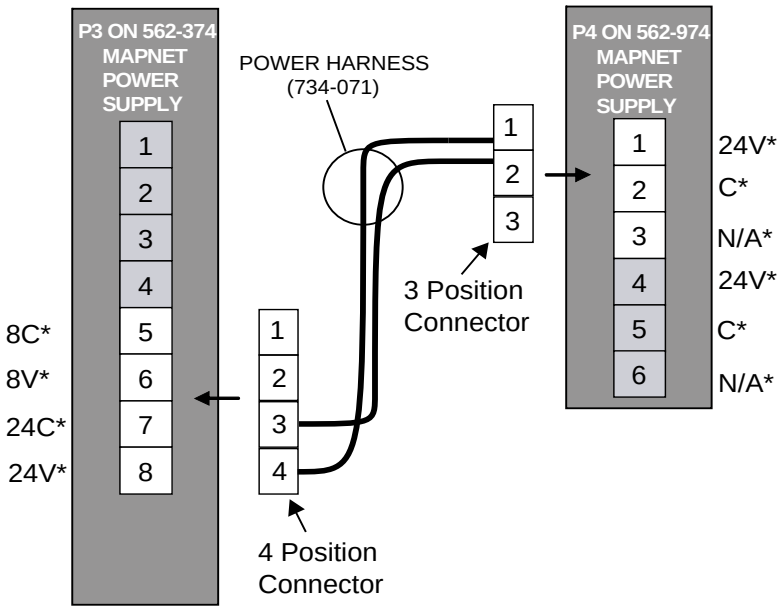

*Note: Designations are only shown as a reference. They do not appear on the PC board.

Figure 16. Signal and Power Connections (4100U/4100ES only)